When seconds matter...

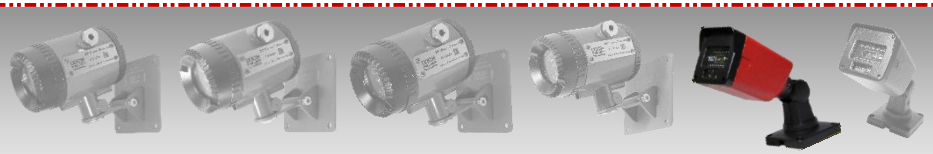

FD30Ex FD50Ex FD30iEx FD50iEx FD30 FD30i

FD30

UV FLAME DETECTOR

The FD30 Flame Detector is a unique Iranian product designed to detect fires from various sources, including hydrocarbons, hydrogen, and other organic compounds. It is suitable for both outdoor and indoor use due to its immunity to sunlight and its sturdy, explosion-proof design. Additionally, the detector's high protection level and low power consumption make it ideal for various industrial and commercial settings.

With the ability to detect flames from different fuels and gases, including invisible hydrogen and organic fires, the FD30 Flame Detector is an exclusive Iranian innovation. It is immune to sunlight, so it does not cause false alarms outdoors. It also features a robust, explosion-proof housing, a high IP rating, and a low power requirement, which make it fit for various industrial and commercial applications.

Note: The detector is able to detect UV radiation from electrical and welding arcs, which can be either an advantage for fire prevention in electrical facilities or a challenge for industrial zones.

FEATURES & BENEFITS

- Solar Blind Technology
- Aluminum Enclosure
- Low Current Consumption
- High speed detection
- Alarm and fault relays
- 1-Year Warranty
- Lifetime after-sales service
- Aluminum mounting bracket

CAUTION: Both flame and smoke detectors are important for fire safety, they detect different aspects of a fire and are used together to provide comprehensive fire protection. Flame detectors are not typically used as a substitute for smoke detectors because they serve different detection functions.

APPLICATIONS

- Chemical plants
- Petrochemicals plants
- Power Generation facilities
- Pharmaceutical Industry
- Printing Industry
- Warehouses
- Refineries
- Automotive Industry
- Aerospace
- Explosives & Munitions
- Paint and solvent processes

ELECTRICAL SPECIFICATIONS

Operating Voltage: 24 VDC nominal (18-32 VDC)

Power Consumption: Standby: Max.19mA
Alarm: Max.30mA

Latching (default) /Non Latching: DIP Switch selectable

OUTPUTS

Relays: Fire, Fault and Alarm

GENERAL SPECIFICATIONS

Spectral Response: 185 to 260 nm

Detection Range: 30m

Response Time: Typically, 10 seconds

Alarm Confirmation Time: 2 to 16 blinks

Sensitivity: Low and High

Sensitivity: 30cm x 30cm (0.1m^2) n-Heptane pan fire from 30m

Field of View: Horizontal 90° Vertical 90°

Temperature Range: Operating: -10°C to +60°C

Humidity: Up to 90% non-condensing

Normal Operation: Green LED Blinking

Alarm Indication: Red LED Steady

Fault Indication: Yellow LED

MECHANICAL SPECIFICATIONS

Materials: Enclosure options: Aluminum
Mounting bracket: Aluminum

Dimensions: 250 x 110 x 70mm

Weight: 200gr

SENSITIVITY

The FD30 Flame Detector is designed to detect a wide range of flames, but its sensitivity may vary depending on the material and type of flame. The flame dimensions are also important for the detector to function properly, and the FD30 is compliant with the European standard EN54-10 in this regard.
The detector is set to its highest sensitivity.

Fuel Type	Fire Size	Detection Distance
N-Heptane	30cm*30cm	30m
Gasoline	30cm*30cm	30m
Diesel Fuel	30cm*30cm	21.6m
JP5	30cm*30cm	21.6m
Kerosene	30cm*30cm	21.6m
Ethanol 95%	30cm*30cm	21.6m
Methanol	30cm*30cm	12.5m
IPA (Isopropyl Alcohol)	30cm*30cm	21.6m
Hydrogen	75cm*25cm^2	24m
CNG (Methane)	75cm*25cm^2	26.4m
LPG (Propane)	75cm*25cm^2	26.4m
Polypropylene Pellets	30cm*30cm	19.8m
Silane	50cm*20cm^2	13.8m
Office Paper	30cm*30cm	12m

SETTINGS

A dip switch is installed on this Detector, which is used to set the alarm as follows.

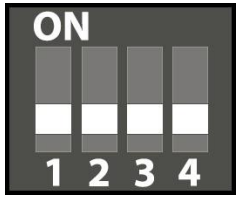

Switch	Application	ON	OFF
DIP 3	Operation Mode	Not applicable	**UV only**
DIP 4	Relay Status	Lock (Latch)	**Resettable (n-latch)**
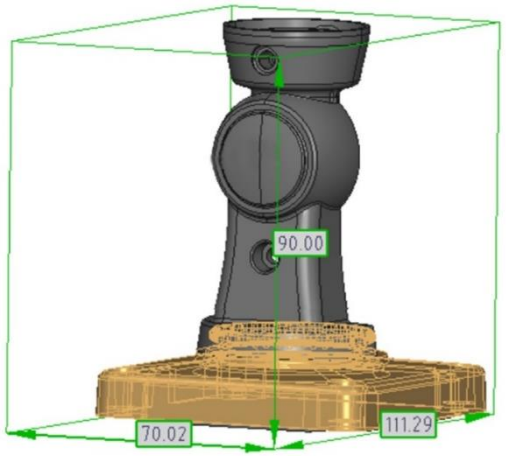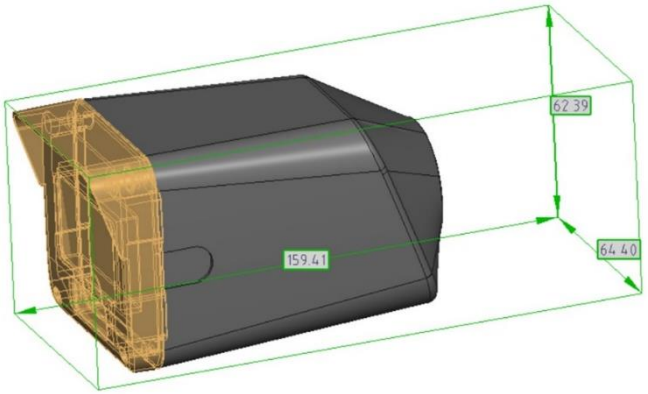
DIP 1	DIP 2	Sensitivity
ON	ON	Low
OFF	ON	Middle
ON	OFF	High
OFF	**OFF**	**Higher**